UK

ENSURE THAT THESE INSTRUCTIONS ARE LEFT
FOR THE USER AFTER COMPLETION OF THE
BENCHMARK SECTION

Format System 25 HE

User instructions

GAS safe REGISTER
199838

benchmark COLLECTIVE MARK
THE MARK OF QUALITY FOR THE INSTALLATION, COMMISSIONING AND SERVICING OF DOMESTIC HEATING AND HOT WATER SYSTEMS

WRAS APPROVED PRODUCT

Please read the Important Notice within this guide regarding your boiler warranty

sime®

IMPORTANT NOTICE

For the first year all of our appliances are protected by our manufacturer's guarantee which covers both parts and labour.
As you would expect from Sime Ltd, it is our aim to provide our valued customers with the best in after sales and service.
To take advantage of any extended warranty offered, all you have to do is to adhere to these 3 simple conditions:

- The installation must be carried out to Manufacturers/Benchmark Standards by a Gas Safe Registered Engineer, and recorded in the installation manual.

- The appliance must be registered with both Sime Ltd and Gas Safe within 30 days of installation.

- The appliance must be serviced annually, by either Sime Ltd or a Gas Safe registered engineer- ensuring that the Benchmark service record in the installation manual is completed.

Failure to comply with the above will result in only the 12 month warranty being offered.
In the absence of any proof of purchase, the 12 month warranty period will commence from the date of manufacture of the boiler as shown on the appliance data plate.

All descriptions and illustrations provided in this manual have been carefully prepared but we reserve the right to make changes and improvements in our products that may affect the accuracy of the information contained in this manual.

Code Of Practice

For the installation, commissioning and servicing of domestic heating and hot water products

Benchmark places responsibilities on both manufacturers and installers.* The purpose is to ensure that customers** are provided with the correct equipment for their needs, that it is installed, commissioned and serviced in accordance with the manufacturer's instructions by competent persons and that it meets the requirements of the appropriate Building Regulations. Installers are required to carry out work in accordance with the following:

Standards of Work

- Be competent and qualified to undertake the work required.
- Install, commission, service and use products in accordance with the manufacturer's instructions provided.
- Ensure that where there is responsibility for design work, the installation is correctly sized and fit for purpose.
- Meet the requirements of the appropriate Building Regulations. Where this involves notifiable work be a member of a Competent Persons Scheme or confirm that the customer has notified Local Authority Building Control (LABC), prior to work commencing.
- Complete all relevant sections of the Benchmark Checklist/Service Record when carrying out commissioning or servicing of a product or system.
- Ensure that the product or system is left in a safe condition and, whenever possible, in good working order.
- Highlight to the customer any remedial or improvement work identified during the course of commissioning or servicing work.
- Refer to the manufacturer's helpline where assistance is needed.
- Report product faults and concerns to the manufacturer in a timely manner.

Customer Service

- Show the customer any identity card that is relevant to the work being carried out prior to commencement or on request.
- Give a full and clear explanation/demonstration of the product or system and its operation to the customer.
- Hand over the manufacturer's instructions, including the Benchmark Checklist, to the customer on completion of an installation.
- Obtain the customer's signature, on the Benchmark Checklist, to confirm satisfactory demonstration and receipt of manufacturer's instructions.
- Advise the customer that regular product servicing is needed, in line with manufacturers' recommendations, to ensure that safety and efficiency is maintained.
- Respond promptly to calls from a customer following completion of work, providing advice and assistance by phone and, if necessary, visiting the customer.
- Rectify any installation problems at no cost to the customer during the installer's guarantee period.

benchmark COLLECTIVE MARK
THE MARK OF QUALITY FOR THE INSTALLATION, COMMISSIONING AND SERVICING OF DOMESTIC HEATING AND HOT WATER SYSTEMS

*The use of the word "installer" is not limited to installation itself and covers those carrying out installation, commissioning and/or servicing of heating and hot water products, or the use of supporting products (such as water treatment or test equipment).
**Customer includes householders, landlords and tenants.

© Heating and Hotwater Industry Council (HHIC)

The Benchmark Scheme

Sime Ltd is a licensed member of the Benchmark Scheme which aims to improve the standards of installation and commissioning of domestic heating and hot water systems in the UK and to encourage regular servicing to optimise safety, efficiency and performance.

Benchmark is managed and promoted by the Heating and Hotwater Industry Council.
For more information visit www.centralheating.co.uk

Please ensure that the installer has fully completed the Benchmark Checklist on the inside back pages of the installation instructions supplied with the product and that you have signed it to say that you have received a full and clear explanation of its operation.
The installer is legally required to complete a commissioning checklist as a means of complyng with the appropriate Building Regulations (England and Wales).

All installations must be notified to Local Area Building Control either directly or through a Competent Persons Scheme.
A Building Regulations Compliance Certificate will then be issued to the customer who should, on receipt, write the Notification Number on the Benchmark Checklist.

This product should be serviced regularly to optimise its safety, efficiency and performance.
The service engineer should complete the relevant Service Record on the Benchmark Checklist after each service.

The Benchmark Checklist may be required in the event of any warranty work and as supporting documentation relating to home improvements in the optional documents section of the Home Information Pack.

CONTENTS

OPERATING INSTRUCTIONS FOR THE USER

1.1 INTRODUCTION 6
1.2 OPERATING INSTRUCTIONS
1.3 MINIMUM CLEARANCES 7
1.4 ROUTINE SERVICING
1.5 GENERAL INFORMATION
1.6 SAFETY 8

These appliances comply with the S.E.D.B.U.K. scheme, band "D"

VERY IMPORTANT!

**PLEASE MAKE SURE YOUR BENCHMARK CHECKLIST IN THE INSTALLATION GUIDE, IS FILLED IN CORRECTLY.
ALL GAS SAFE REGISTER INSTALLERS CARRY A ID CARD.
THE REGISTRATION NUMBER SHOULD BE RECORDED ON THE CHECK LIST.
YOU CAN CHECK YOUR INSTALLER IS GAS SAFE REGISTERED BY CALLING ON 0800 408 5577**

THE GAS SAFETY (INSTALLATION AND USE) REGULATIONS 1996. It is the law that all gas appliances are installed by a registered person, in accordance with the above regulations. Failure to install appliances correctly could lead to prosecution.
It is in your own interest, and that of safety, to ensure that the law is complied with.

It is essential that the appliance is correctly earthed. An electricity supply of 240 V - 50 Hz fused at 3 A is required.

Read these instructions carefully before attempting to operate the appliance.

1.1 INTRODUCTION

The Sime **"FORMAT SYSTEM 25 HE"** family is a fully automatic, wall mounted, room sealed, fan assisted range of combination boilers.
The appliance provides central heating as required.
The heat output is automatically controlled by the fully modulating gas valve (within its pre-set limits), and there are user adjustable potentiometers to control the temperature of central heating.
A temperature/pressure gauge is fitted and an overheat thermostat is incorporated to protect against fault conditions.

1.2 OPERATING INSTRUCTIONS

1.2.1 To light the appliance (see fig. 1)

- Turn the selector rotary switch to the WINTER position " ❄ " and the burner will light to serve the heating load. Set the required temperature for the C.H. by rotating the potentiometer (E) clockwise to increase or anticlockwise to decrease the temperature.

1.2.2 To turn off the appliance (see fig. 1)

- **For short periods:**
  Set the selector switch (C) to OFF position. When required, turn the selector switch to the WINTER position.

- **For longer periods:**
  Set the selector switch (C) to the OFF position, turn off the gas isolation cock. When required, manually rotate the pump, open the gas isolation cock and turn the selector switch to the WINTER position.

  NOTE: If frost protection is required-Leave the selector switch in the winter position, turn then CH thermostat to minimum (fully anticlockwise), do not isolate the gas supply.

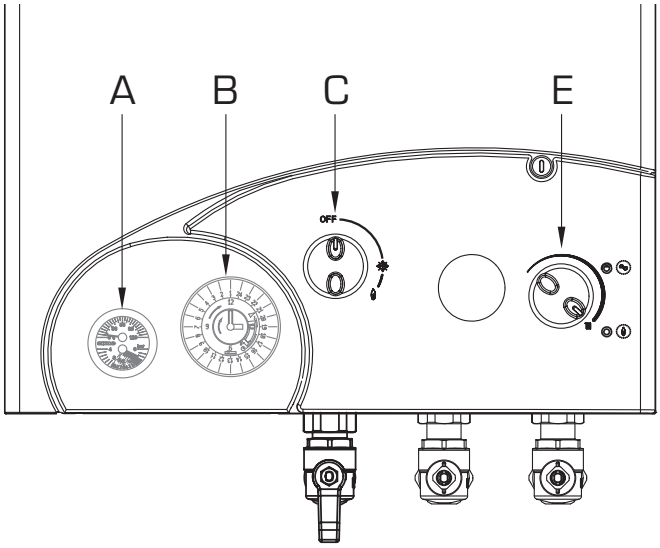

KEY
A Temperature/pressure gauge
B Time clock (optional)
C Rotary switch
E C.H. thermostat

Fig. 1

1.3 MINIMUM CLEARANCES

The following MINIMUM CLEARANCES must be available for servicing the appliance:

	For ventilation	For servicing
ABOVE THE APPLIANCE CASING	200 mm	300 mm
AT THE R.H.S.	15 mm	15 mm
AT THE L.H.S.	15 mm	15 mm
BELOW THE APPLIANCE CASING	200 mm	200 mm
IN FRONT OF THE APPLIANCE	350 mm	500 mm

1.4 ROUTINE SERVICING

To ensure continued efficient operation of the appliance, it is recommended that it is checked and serviced as necessary at regular intervals.
The frequency of servicing will depend upon the particular installation conditions and usage but in general once a year should be adequate. It is the law that any service work must be carried out by a registerd person (Gas Safe Register).

1.5 GENERAL INFORMATION

1.5.1 Fault finding indicators (LEDS)

The appliance is fitted with a safety cut-out thermostat. In the event of overheating this will interrupt the power supply and prevent the appliance from functioning.
If this occurs, allow the appliance to cool, turn the rotary switch to " 🔥 " position and release it immediately, then turn it back to the previous position (see fig. 2).
If the cut-out condition is repeated, turn off the electrical supply and consult your installer or service engineer.

1.5.2 Temperature/pressure gauge

The gauge (A fig. 1) on the facia panel indicates the approximate system pressure. If the normal running pressure is seen to decrease over a period of time there is a water leak and you should consult your installer or service engineer.

1.5.3 Electrical supply

The mains plug used must be a 3 pin type to BS1363, and fused at 3 A. THIS APPLIANCE MUST BE EARTHED.

NOTE: an interruption in the electricity supply whilst the burner is alight may cause the overheat thermostat to operate. If this is suspected, turn the rotary switch to " 🔥 " position and release it immediately, then turn it back to the previous position.

TO CONNECT A PLUG
As the colour of wires in the mains lead of this appliance may

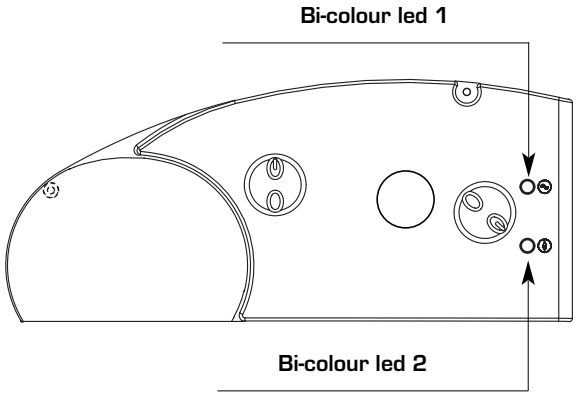

Operating mode	Bi-colour led 1	Bi-colour led 2
Stand-by	green ON	OFF
Flame presence	green ON	orange ON
Flame detection circuit fault	green ON	flashing orange
Ignition lock	OFF	red ON
Water flow switch (FL) or limit stat (TL) intervention	flashing orange	OFF
Fan fault	flashing green	OFF
C.H. sensor (SM) fault	steady orange	OFF
Boiler off	OFF	OFF

Fig. 2

not correspond with the coloured markings identifying the terminals in your plug, proceed as follows:
the wire which is coloured green and yellow must be connected to the terminal in the plug which is marked with the letter E or by the earth symbol - or coloured green and yellow; the wire which is coloured blue must be connected to the terminal marked with the letter N or coloured black; the wire which is coloured brown must be connected to the terminal marked with the letter L or coloured red.

1.5.4 Ventilation

If the appliance is installed in a cabinet, the latter MUST NOT be used for storage purposes.
Any ventilation provided for the appliance during installation MUST NOT be blocked and a periodic check must be made to ensure that the vents are free from obstructions.

1.5.5 Cleaning

Use only a damp cloth and mild detergent to clean the appliance outer casing. DO NOT use abrasive cleaners.

1.6 SAFETY

It is essential that the instructions in this booklet are strictly followed for the safe and economical operation of this appliance. The appliance functions as a fan assisted balanced flue unit.
The flue terminal MUST NOT BE OBSTRUCTED under any circumstances. If damaged, turn off the appliance and consult the installer, service engineer, or gas supplier. If it is known or suspected that a fault exists on the appliance it MUST NOT be used until the fault has been rectified by a competent person.

WARNING: IF A GAS LEAK IS SUSPECTED OR EXISTS, TURN OFF THE GAS SUPPLY TO THE APPLIANCE AT THE GAS SERVICE COCK. DO NOT OPERATE ANY ELECTRICAL SWITCHES. DO NOT OPERATE ANY ELECTRICAL APPLIANCE. OPEN ALL WINDOWS AND DOORS. DO NOT SMOKE. EXTINGUISH ALL NAKED LIGHTS. CONTACT THE GAS SUPPLIER IMMEDIATELY.

Cod. 6274236 - 02/11 - Documentation Dpt.

Sime Ltd
1a Blue Ridge Park
Thunderhead Ridge
Glasshoughton, Castleford, WF10 4UA

Phone: 0845 9011114
Fax: 0845 9011115

www.sime.ltd.uk
Email: enquiries@sime.ltd.uk